E-941S-1K2/HQ

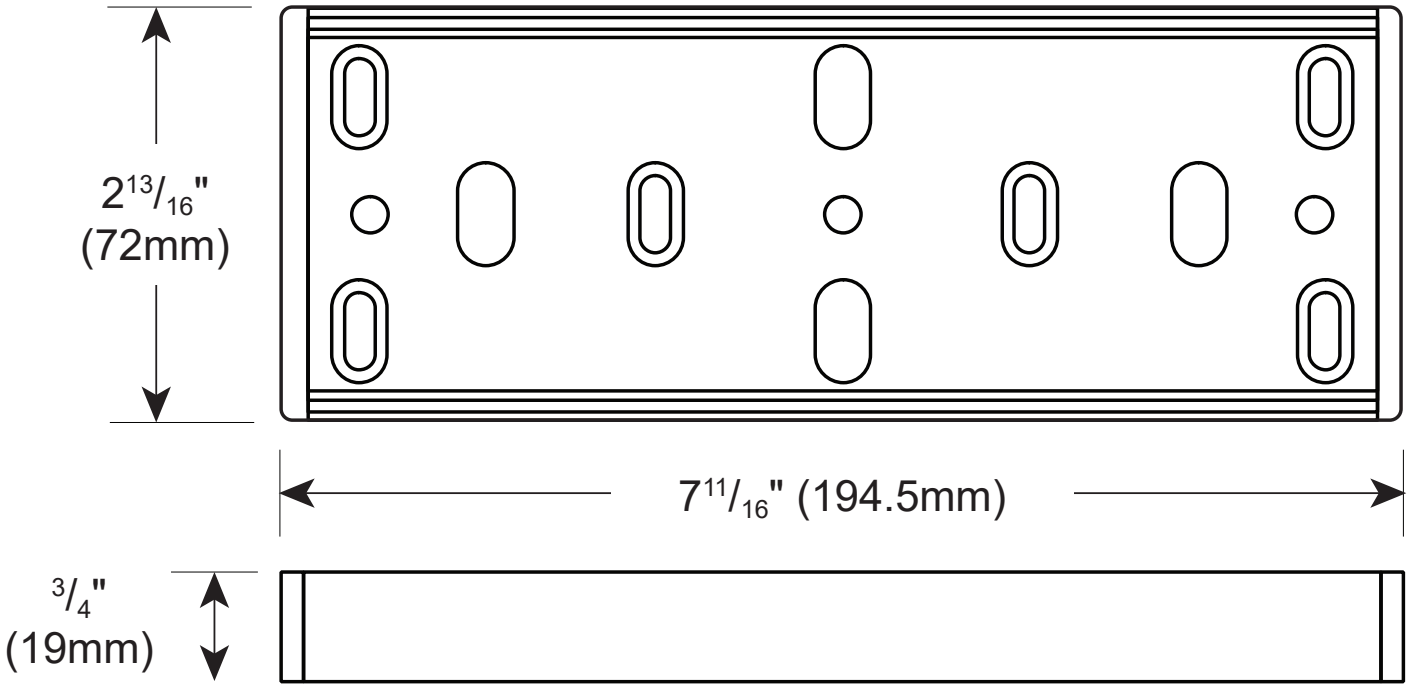

DG_E-941S-1K2HQ_250923.ai

SECO-LARM®
www.seco-larm.com