QN90D

Dimensions in millimeters (+ / - 0.1 mm)

QN90D Sharp Neck Hexegon

	QN90D			
	43"/50"/55"	**65"**	**75"**	**85"**
W*H*D	43"/50": 519 * 217.9 * 219.9 55": 388.3 * 216.9 * 237	390 * 236.1 * 270.6	416.9 * 264.7 * 301.2	417.6 * 266 * 321.3

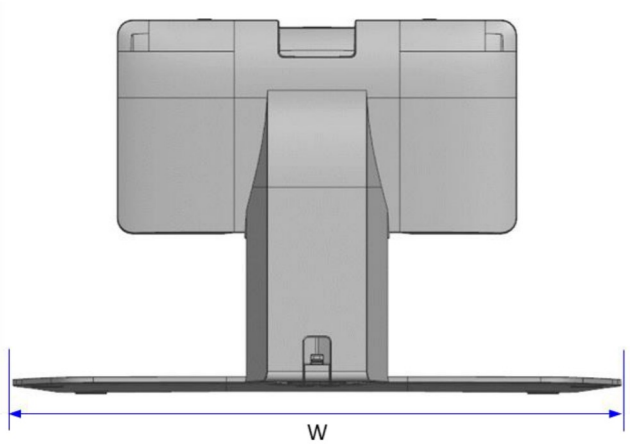

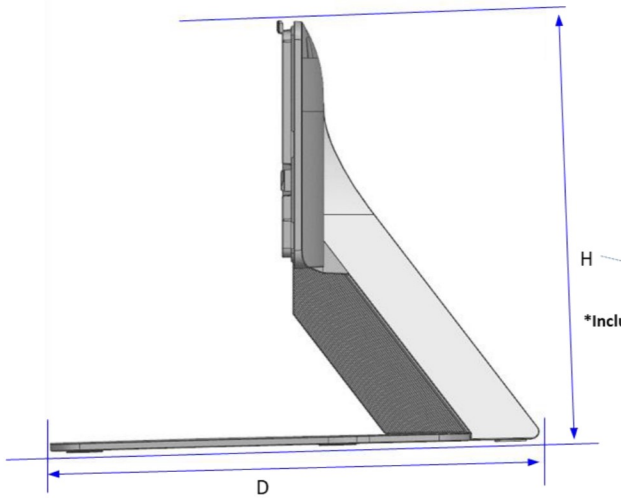

*Includes Rubber

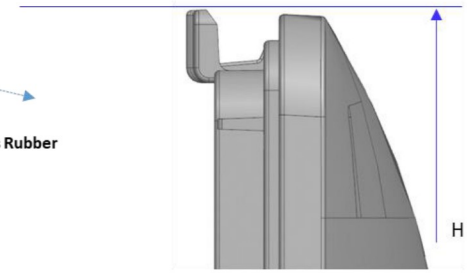

SAMSUNG IS NOT RESPONSIBLE FOR INACCURACIES. FOR CRITICAL INSTALLATIONS,
IT IS STRONGLY RECOMMENDED TO CONFIRM ALL MEASUREMENTS USING THE SPECIFIC TV TO BE INSTALLED.

QN90D

Dimensions in millimeters (+ / - 0.1 mm)

98” QN90D Stand Dimensions

	98"
CENTER STAND (W*H*D)	478.9 * 284.5 * 364.9
SOUND BAR space (A)	70

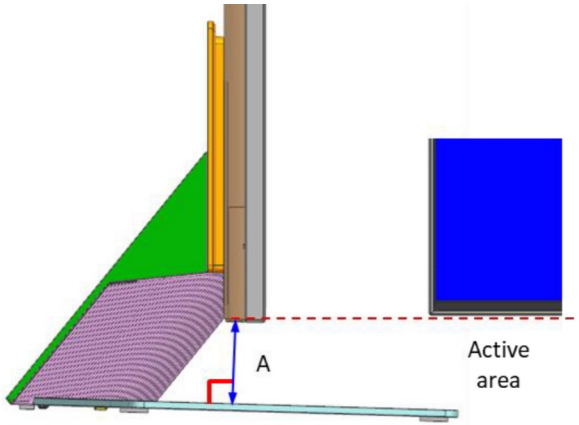

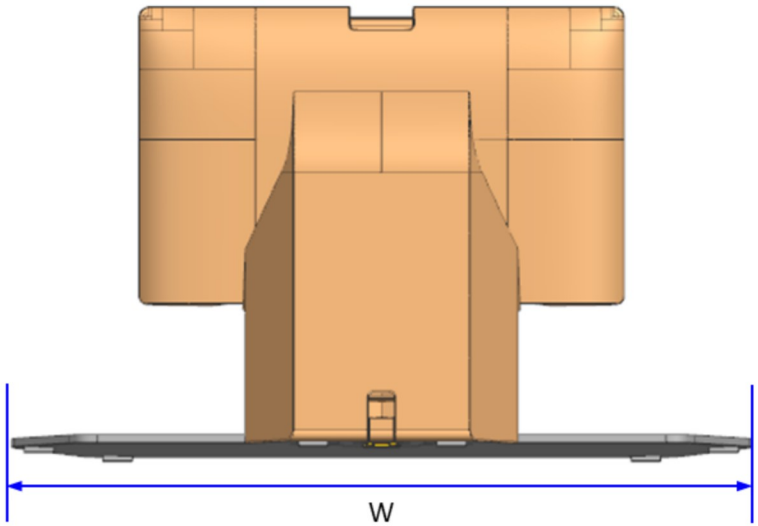

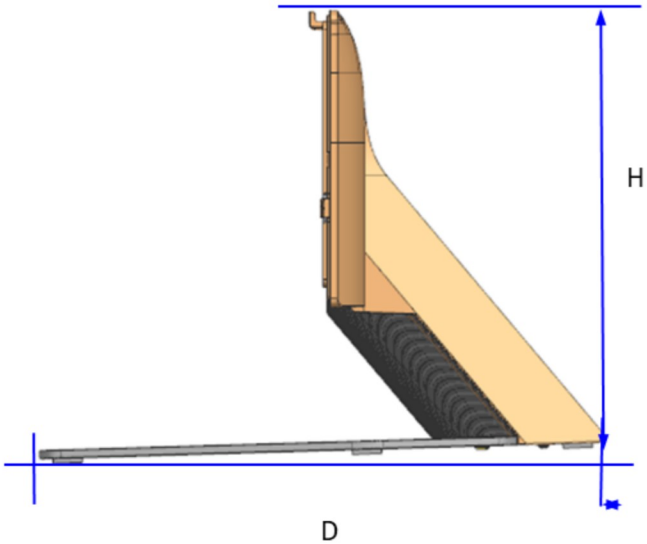

*Rubber

SAMSUNG IS NOT RESPONSIBLE FOR INACCURACIES. FOR CRITICAL INSTALLATIONS,
IT IS STRONGLY RECOMMENDED TO CONFIRM ALL MEASUREMENTS USING THE SPECIFIC TV TO BE INSTALLED.

QN90D

Dimensions in millimeters (+ / - 0.1 mm)

2024 New Model IR Sensor Information

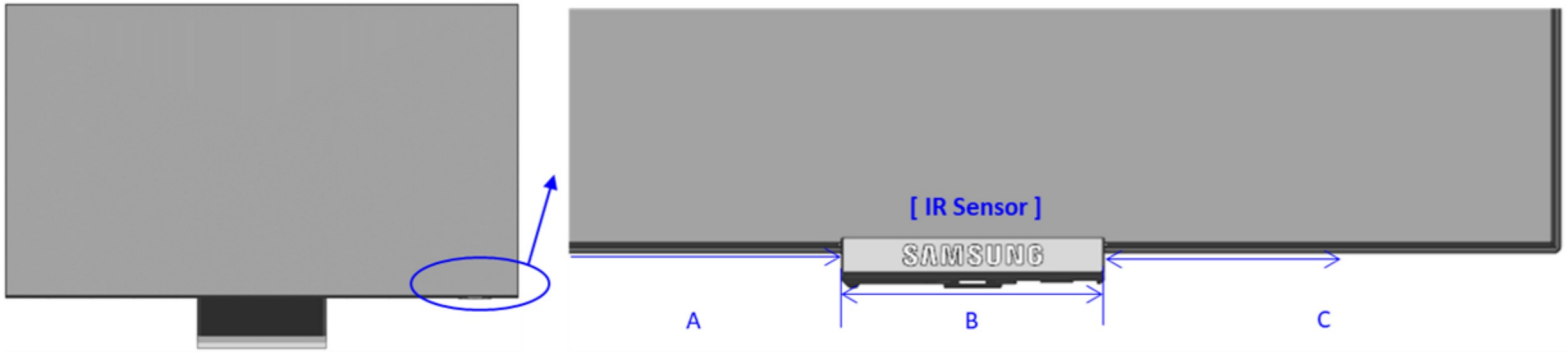

Product	Series	Inch	Item	Sensor Position	DIMENSION		
					A	B	C
	QN90D	98	QN98QN90DAFXZA	Right	2002.7	27.6	154.7
		85	QN85QN90DAFXZA	Right	1684.3	27.6	180.3
		75	QN75QN90DAFXZA	Right	1488.7	27.6	153.7
		65	QN65QN90DAFXZA	Right	1310.0	27.6	108.7
		55	QN55QN90DAFXZA	Right	1115.7	27.6	84.0
		50	QN50QN90DAFXZA	Right	1009.1	27.6	76.9
		43	QN43QN90DAFXZA	Right	865.7	27.6	67.5

SAMSUNG IS NOT RESPONSIBLE FOR INACCURACIES. FOR CRITICAL INSTALLATIONS,
IT IS STRONGLY RECOMMENDED TO CONFIRM ALL MEASUREMENTS USING THE SPECIFIC TV TO BE INSTALLED.